Aft Blue

Work Order ID 68280-~~2~~1

Monday, April 11, 2011 12:49:02 PM

Item ID: D2646
Revision ID:
Item Name: Aft Cap
Start Date: 4/11/2011 **Start Qty:** ~~6.00~~ 60
Required Date: 4/15/2011 **Req'd Qty:** 6.00
Reference:

Accept

Setup **Start**
Stop

Cust Item ID:
Customer:

Approvals: **Process Plan:** N **Date:** 11-04-11 **Tooling:** _____ **Date:** _____
QC: _____ **Date:** _____ **SPC (Y/N):** _____ **Date:** _____

Run **Start**
Stop

Sequence ID/ Work Center ID	Operation Description	Set Up/ Run Hours	Tool ID	Tool #	Plan Code	Accept Qty	Reject Qty	Reject Number	Insp. Stamp
Draw Nbr D2646	**Revision Nbr** Rev C								
100 Purchasing	PURCHASING	0.00							
Purchasing	**Memo** Issue P/O: 13845 ☐1-Spin as per Dwg D2646 ☐2-Material release note required	0.00				CL	11/04/11	60	
110 Packaging	Receive & Inspect for Damage & Mat'l Certs	0.00							
Packaging	**Memo** Ensure Material Release Note is attached	0.00				11/05/13		60	
120 QC	QC6- inspect dimensions to drawing	0.00							
Quality Control	**Memo**	0.00							

8 11/15/16

counts x60

QSP015

er ID 68280
11, 2011 12:49:02 PM

D2646

Accept

Setup Start

Stop

Aft Cap

4/11/2011 **Start Qty:** 6.00

4/15/2011 **Req'd Qty:** 6.00

Cust Item ID:

Customer:

Process Plan: _____ **Date:** _____ **Tooling:** _____ **Date:** _____

QC: _____ **Date:** _____ **SPC (Y/N):** _____ **Date:** _____

Run Start

Stop

Sequence ID/ Work Center ID	Operation Description	Set Up/ Run Hours	Tool ID	Tool #	Plan Code	Accept Qty	Reject Qty	Reject Number	Insp. Stamp
30 Small Fab	Small Fab	0.00							
	Memo 1-Drill using DT8026 as per Dwg D2646.□2-Open holes to .297 as per Dwg D2646.□3-Deburr	0.00				60X	Ø	M-f 11/05/25	
140 QC Quality Control	QC5- Inspect part completeness to step on W/O	0.00							
	Memo	0.00 δ 11/05/30				counts x60			
150 HandFinish Hand Finishing	Chemical Conversion Coat per QSI005 4.1	0.00							
	Memo	0.00				x60	Ø	M 11/05/37	

Work Order ID 68280 - 1

Monday, April 11, 2011 12:49:02 PM

Item ID: D2646 **Accept** **Setup Start** **Stop**

Revision ID:

Item Name: Aft Cap

Start Date: 4/11/2011 **Start Qty:** 6.00 **Cust Item ID:**

Required Date: 4/15/2011 **Req'd Qty:** 6.00 **Customer:**

Reference:

Run Start **Stop**

Approvals: **Process Plan:** _____ **Date:** _____ **Tooling:** _____ **Date:** _____

QC: _____ **Date:** _____ **SPC (Y/N):** _____ **Date:** _____

Sequence ID/ Work Center ID	Operation Description	Set Up/ Run Hours	Tool ID	Tool #	Plan Code	Accept Qty	Reject Qty	Reject Number	Insp. Stamp
160 Powdercoat Powder Coating Spray paint	~~White Gloss(Ref:4.3.5.1)~~ per QSI005 4.3-Alum/ Primer B117319 Delfleet Blue B115985 Clear Delfleet B117984	0.00				RT	11	06	15
	Memo START TIME: _____ FINISH TIME: _____	0.00 OVEN TEMPERATURE: _____							
170 QC Quality Control	~~QC3~~ Inspect Part Finish QC14	0.00					11	06	16 (4)
	Memo	0.00							
180 Small Fab Small Fab	Small Fab	0.00				4	0	11	16
	Memo Install inserts as per Dwg D2646	0.00							

Work Order ID 68280-1

Monday, April 11, 2011 12:49:02 PM

Item ID: D2646 **Accept** **Setup Start** **Stop**

Revision ID:

Item Name: Aft Cap

Start Date: 4/11/2011 **Start Qty:** 6.00 **Cust Item ID:**

Required Date: 4/15/2011 **Req'd Qty:** 6.00 **Customer:**

Reference:

Run Start **Stop**

Approvals: **Process Plan:** _____ **Date:** _____ **Tooling:** _____ **Date:** _____

QC: _____ **Date:** _____ **SPC (Y/N):** _____ **Date:** _____

Sequence ID/ Work Center ID	Operation Description	Set Up/ Run Hours	Tool ID	Tool #	Plan Code	Accept Qty	Reject Qty	Reject Number	Insp. Stamp
190	QC5- Inspect part completeness to step on W/O	0.00							
QC	Memo	0.00							
Quality Control							11	06	16 (4)
200	Identify as per dwg & Stock Location: FP-4	0.00							
Packaging	Memo	0.00				4	0		11/06/16
Packaging									
210	QC21- Final Inspection - Work Order Release	0.00							
QC	Memo	0.00							
Quality Control									

11/6/16

MK 11-06-16

Picklist Print

Monday, April 11, 2011 12:49:11 PM

Work Order ID: 68280

Parent Item: D2646

Parent Item Name: Aft Cap

Start Date: 4/11/2011 **Required Date:** 4/15/2011

Start Qty: 6.00 **Required Qty:** 6.00

Comments: IPP: G□05.08.22□Hole size revised in Step 5□KJ/JLM□
IPP Rev:H Changed Inserts 07-02-19 JLM
IPP rev I changed inserts 07.06.11 EC

Component Item ID/ Item Name	Replacement Item ID	Mfg/ Purch	Bin Item	Primary Location	Last Location	Route Seq ID	Unit of Measure	Qty on Hand	Qty per Kit	Total Qty	Qty Issued	Date Issued	Status
ALS7-1032-130		Purchased	No			110	Each	597.0000	2	120 ?			
Insert													

Location		Loc Qty	Loc Code
ST281		200	M117717
	117331	200	
ST282		397	
	116800	397	

x12 ?

D2646P		Purchased	No			180	Each	0.0000	1	60			
Aft Cap													

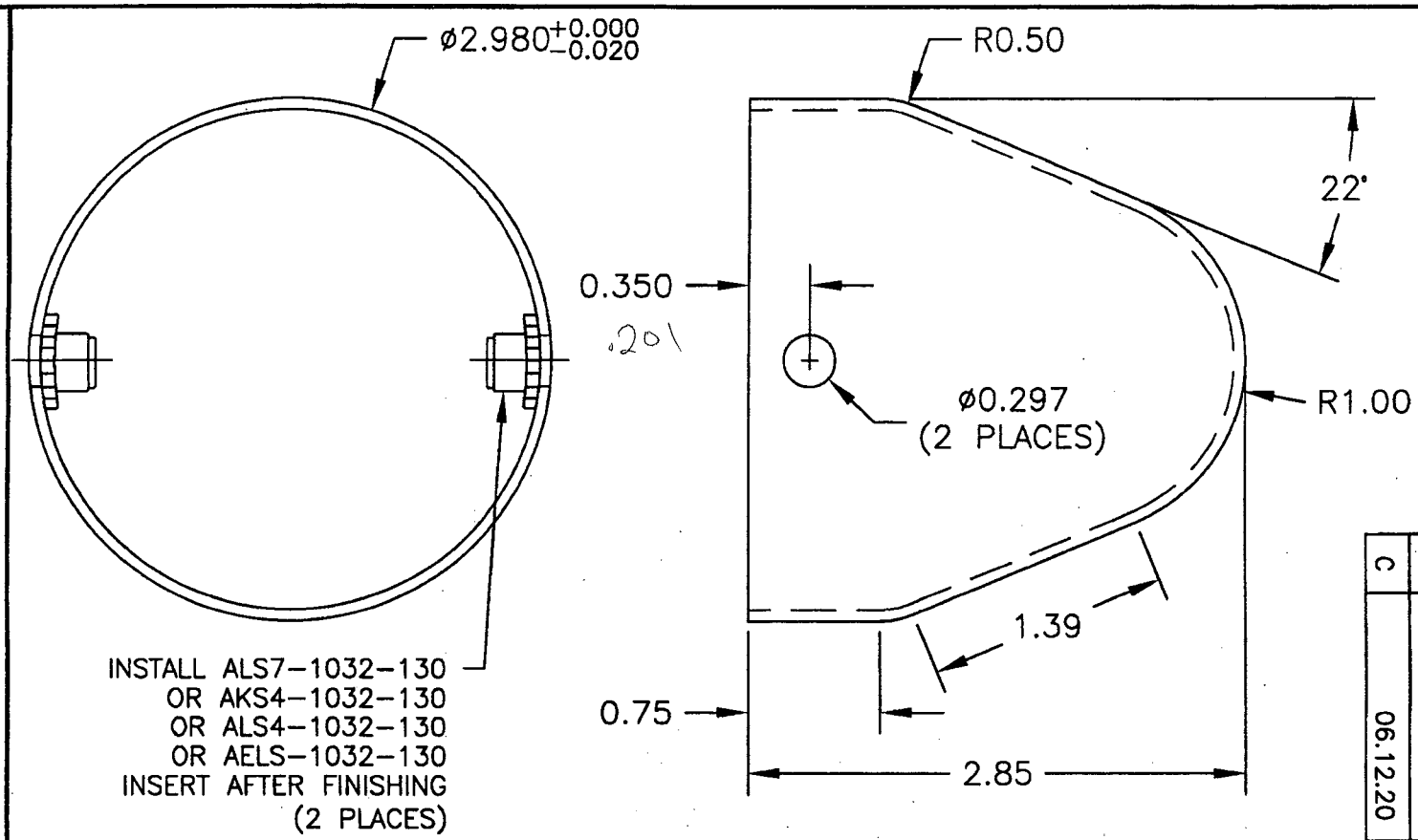

DESIGN DS	DRAWN BY PH	DART AEROSPACE USA, INC. PORT HADLOCK, WA	
CHECKED	APPROVED	DRAWING NO. D2646	REV. C
DATE 06.12.20		TITLE AFT CAP	SHEET 1 OF 1
			SCALE 1:1

A	97.03.25	NEW ISSUE
B	05.04.01	CHANGE TO CLOSED INSERTS
C	06.12.20	CHANGE TO OPEN ENDED INSERTS

D2646 AFT CAP

1) MATERIAL: ALUMINUM 1100−0 0.063 THICK (QQ−A−250/1)
2) FINISH: CHEMICAL CONVERSION COAT PER DART QSI 005 4.1
   POWDER COAT ASSEMBLY WHITE (4.3.5.1) PER DART QSI 005 4.3
3) ALL DIMENSIONS ARE IN INCHES
4) TOLERANCES ARE PER DART QSI 018 UNLESS OTHERWISE NOTED

RELEASED 07.02.12

SHOP COPY
RELEASED TO
ENGINEERING
UNCONTROLLED COPY
SUBJECT TO AMENDMENT
WITHOUT NOTICE
WORK ORDER
NO. 28480

Copyright © 1997 by DART AEROSPACE USA, INC.
THIS DOCUMENT IS PRIVATE AND CONFIDENTIAL AND IS SUPPLIED ON THE EXPRESS CONDITION THAT IT IS NOT TO BE USED FOR ANY PURPOSE OR COPIED OR COMMUNICATED TO ANY OTHER PERSON WITHOUT WRITTEN PERMISSION FROM DART AEROSPACE USA, INC.

Dart Aerospace Ltd.
1270 Aberdeen Street
Hawkesbury, ON K6A 1K7
Tel: 613 632 9577
Fax: 613 632 1053

PURCHASE ORDER

Purchase Order ID PO13845

Purchase Order Date 4/11/2011
PO Print Date 4/11/2011

Order From : VC-SIE001

SIEG'S MANUFACTURING LTD.
6236 - 205 STREET
LANGLEY, BC V2Y 1N7
CA

Contact Name		**Buyer**	Chantal Lavoie
Vendor Phone	604 530 7455	**Requisition Nbr**	
Vendor Fax	604 530 7490	**Tax Resale Nbr**	10127-2607
Vendor Account Nbr		**Terms**	Net 30
		Currency	CAD
		FOB	Destination-Collect

Ship To : DART AEROSPACE LTD 1270 ABERDEEN
HAWKESBURY, ON K6A 1K7
CANADA

FAXED CL 11 Dec 11

Line Nbr	Reference / Revision ID / Vendor Part Number	Description/ Mfg ID	Req Date/ Taxable	Req Qty/ Unit of Measure	Ship Method	Unit Price	Extended Price
1	D2646P	Aft Cap	4/22/2011 Yes	60.00 Each	FedEx PI collect	$6.4700	$388.20

Special Inst: SPIN AS PER DWG D2646 REV. C
B68280

PO Total: **$388.20**

CERTIFICATE OF CONFORMITY
REQ'D UPON DELIVERY

MATERIAL CERTIFICATION
REQ'D UPON DELIVERY

No substitution or deviation without consent.
Certificate of Conformity or Material Certification required when applicable

Change Nbr: 1 **Change Date:** 4/11/2011

Sieg's Manufacturing Ltd. Packing Slip

Metal Spinning & Fabricating
6236 205 Street
Langley, BC, Canada V2Y 1N7
Phone:(604)530 7455 Fax:(604)530-7490

Packing Slip No.:	39147
Date:	05/05/2011
Page:	1

Sold to:	Ship to:
DART AEROSPACE LTD. 1270 ABERDEEN STREET HAWKESBURY, ONTARIO K6A 1K7	DART AEROSPACE LTD. 1270 ABERDEEN STREET HAWKESBURY, ONTARIO K6A 1K7
Order No.: 13845	**Sold By:** KAULBARS, ARLA
Shipped By: fed ex	**Ship Date:** 05/05/2011
Tracking No.: 076882515001054	

Item No.	Unit	Description	Quantity
D2646P	Each	AFT CAP	60

Comment:

Sieg's Manufacturing Ltd.
6236 205 Street Langley, B.C. Canada V2Y 1N7
Ph#: (604)530-7455 fax#: (604)530-7490
arla@siegsmfg.com

INSPECTION REPORT

Date: May 5/11
Customer: Dart Areospace
Packing Slip: 39147

Part#:	Quantity	Material	Check holes	Insp. By.
D2646P	60	1100-0064	N/A	[illegible]

Notes:

Material Certification Attached: ✓

FORM: 1002 WORKORDER: 2401219112

COPPER AND BRASS SALES

MATERIAL TYPE

ALUMINIUM ALLOYS

PRODUCT DESIGNATION

1100 1350 3003 3004 3105 5005 5083 5086 5182 5454 6061 6063

"WARNING"

SMALL CHIPS, FINE TURNINGS AND DUST MAY IGNITE READILY. EXPLOSIONPOTENTIAL MAY BE PRESENT WHEN:DUST OR FINES ARE DISPERSED IN THE AIR; FINE, DUST OR MOLTEN ALUMINUMARE IN CONTACT WITH CERTAINMETAL OXIDES; OR, CHIPS, FINES, DUST OR MOLTEN ALUMINUM ARE IN CONTACT WITH WATER OR MOISTURE. KEEP AWAY FROM IGNITION SOURCE. USE EXPLOSION- PROOF VENTILATION. KEEP MATERIAL DRY.

INHALING LARGE AMOUNTS OF COPPER, MAGNESIUM OXIDE, MANGANESE OXIDE, AND ZINC OXIDE FUMES OR DUST MAY CAUSE METAL FUME FEVER WITH FLU-LIKE SYMPTOMS. CHRONIC OVEREXPOUSURE TO COPPER MAY CAUSE THICKENING OF THE SKIN; AND SKIN,TEETH,AND HAIR DISCOLORATION. CHRONIC OVEREXPOUSURE TO MANGANESE DUST CAN CAUSE CENTRAL NERVOUS SYSTEM DAMAGE,SCARRING OF THE LUNGS AND REPRODUCTIVE HARM IN MALES.TARGET ORGAN IS PRIMARILY THE LUNG,BUT REPEATED HIGH EXPOSURE CAN ALSO AFFECT THE LIVER.CHRONIC OVEREXPOSURE TO TIN DUST OR IRON OXIDE DUST/FUME MAY CAUSE LUNG SIDEROSIS.CHRONIC OVEREXPOUSURE TO SILICON DUST CAN CAUSE CHRONIC BRONCHITIS.

THIS PRODUCT ALSO CONTAINS LEAD AND CHROMIUM COMPOUNDS.LEAD IS KNOWN TO CAUSE REPRODUCTIVE TOXICITY AND IS A KNOWN CARCINOGEN.EXPOSURE TO CHROMIUM DUST OR FUME MAY CAUSE METAL FUME FEVER WITH FLU-LIKE SYMPTOMS AND KIDNEY AND KIDNEY AND LIVER DAMAGE.UNDER HIGH TEMPERATURES,HEXAVALENT CHROMIUM MAY BE PRODUCED,IF INTHE INSOLUBLE FORM,IT IS A CONFIRMED HUMAN CARCINOGEN. (CALIFORNIA PROPOSITION 65). IF COATED WITH OIL,MAY CAUSE SKIN IRRITATION/DERMATITIS BY CONTACT. WELDING FUME IS LISTED AS A POSSIBLE CARCINOGENIC TO HUMANS.READ THE ALUMINUM/ALUMINUM ALLOYS MATERIAL SAFETY DATA SHEET(MSDS) ON FILE WITH YOUR EMPLOYER BEFORE WORKING WITH THIS MATERIAL.

* If processing or recycling produces particulate,use exhaust ventilation or other controls designed to prevent exposure to workers. Examples of such activities include melting, welding,grinding,abrasive sawing,sanding and polishing.Any activity which abrades the surface of this material can generate airborne particulate.Use appropriate NIOSH approved respiratory protection (P95; P100 for lead with, quantitative fit testing required) if exposures exceed the permissible limits.
* The Occupational Safety and Health Administration (OSHA) have set mandatory limits on occupational exposures.
* Aluminum, in solid form and as contained in finished products presents no special health risk.
* Sold for manufacturing purposes only.This product can be recycled; contact your sales representative.

The Occupational Safety and Health Administration require employers to provide training in the proper use of this product.

For additional information, call or write to Copper and Brass Sales,22355 West Eleven Mile Road, Southfield, MI 48033,telephone248-233-5600, or visit our web site @ www.copperandbrass.com.

Alumax Mill Products, Inc.
(an Alcoa Inc. business)
1480 Manheim Pike
Lancaster, Pa. 17601

Certification of Test Results

SOLD TO
COPPER & BRASS SALES INC
22355 WEST ELEVEN MILE ROAD
SOUTHFIELD, MI 48034

SHIP TO
LEVELTEK
3236 STATE ROAD 39
PO BOX 148
LA PORTE , IN 46352

CERT NO 0001260980
DATE 12/13/2010
SKID NO 957162
SKID WGT 6,959
PAGE 1 OF 1

ORDER NO	LO0400	PO NO	5400080193-R01			
ITEM NO	1	PART NO	ALFLR01226			
ALLOY	1100	TEMPER	O	FORM	COIL	
GAUGE	.06300	WIDTH	48.0000	LENGTH	0.0000	

MILL FINISH
NON ANODIZE QUALITY
OUT: STANDARD MILL FINISH
IN: STANDARD MILL FINISH
NOT EMBOSSED

Alcoa Certification 0001260980

LOT: 461649 COIL: C01 DROP: 0P06534

INGOT	SI	FE	CU	MN	MG	CR	NI	ZN	TI
0P06534	0.12	0.43	0.13	0.05	0.05	0.01	0.01	0.01	0.01

HEAD ULTIMATE STRENGTH 14.6 KSI
TAIL ULTIMATE STRENGTH 15.0 KSI
HEAD YIELD STRENGTH (OFFSET = .2%) 6.8 KSI
TAIL YIELD STRENGTH (OFFSET = .2%) 5.0 KSI
HEAD ELG IN 2 IN., AT FRACTURE 30 %
TAIL ELG IN 2 IN., AT FRACTURE 30 %

CHEMICAL COMPOSITION ACCORDING TO ASTM E-1251-07
CHEMISTRY EXPRESSED AS % W/W FOR EACH REPORTED ELEMENT
MECHANICAL PROPERTIES ACCORDING TO ASTM B-557-10

MECHANICAL AND CHEMICAL PROPERTIES ~~MEET THE~~ REQUIREMENTS OF:
ASME SB209 1100 O, ASTM B209-07 1100 O → ACCEPTABLE BASED ON SIMILARITY WITH M-DRAWING "SPEC" CALLING ASTM B209 FOR SHEET METAL ALUMINUM (REF. M2024T3S, M5052H32S, M6061T6S).

11.05.16
051042.

** END OF CERTIFICATION **

We hereby certify that, unless otherwise indicated, the material covered by this report has been manufactured, inspected, and tested in accordance with, and has been found to meet, the applicable requirements described herein, including any specifications forming a part of the description and that samples representative of the material met the composition. Also, note that mercury is not a normal contaminant in aluminum alloys and neither it nor any of its compounds are used in the manufacture of our product. Certification of test results shall not be reproduced except in full. This material was melted in the United States or a qualifying country (REF DFARS 225.872.1A); It was manufactured in the United States.

These commodities, technology and software exported from the United States in accordance with the Export Administration Regulations. Diversion contrary to U.S. law prohibited. This certification complies with EN 10204:2004.

Authorized By:
JEFF KREADY, LAB SUPERVISOR